opta

new family

Opta meets the typical needs of office and public interiors – low glare and high luminous flux. When you add minimalist aesthetics and refined design, you get a recipe for the perfect tool for building an ergonomic and visually friendly space. The range consists of surface--mounted and suspended luminaires in the form of rectangles with asymmetrically arranged light modules and symmetrical squares. An optical PMMA lens assembly directs light at two angles of 50° and 80° – alwayswith a high (CRI90) colour rendering index. Available colour temperature values: 2700°K, 3000°K, and 4000°K . The glare factor of UGR <19 makes this range suitable for workplaces where screens are used.
The Opta Disk version is a discreet adjustable spotlight available in both recessed and surface-mounted versions. It should be noted that the height of the NT model is only 30mm and the discs offer 25° tilt range, which makes it one of the lowest luminaires of its kind on the market.

opta disk round WP ↓

↑ opta disk x1WP / x2 WP

Opta Grid NT

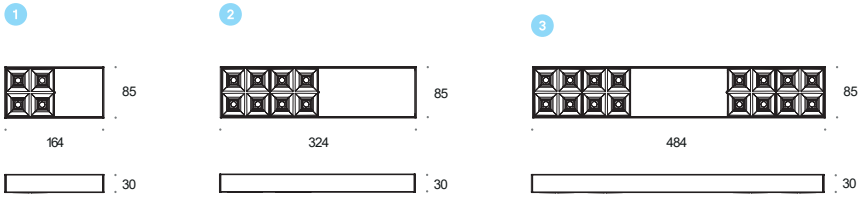

Opta Grid NT

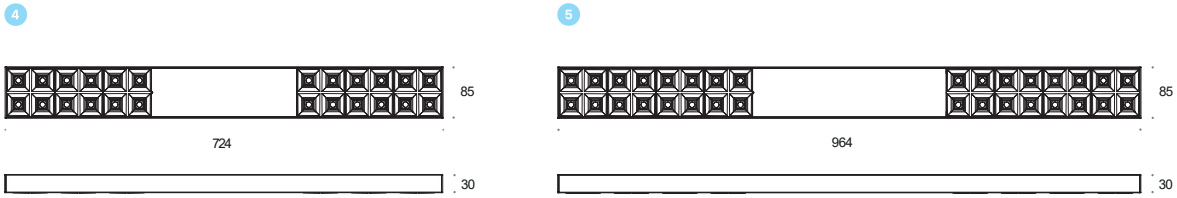

Opta Grid NT

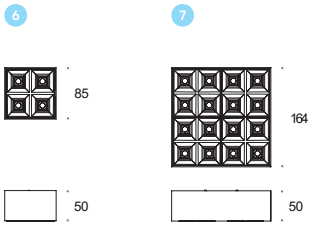

Opta Grid ZW

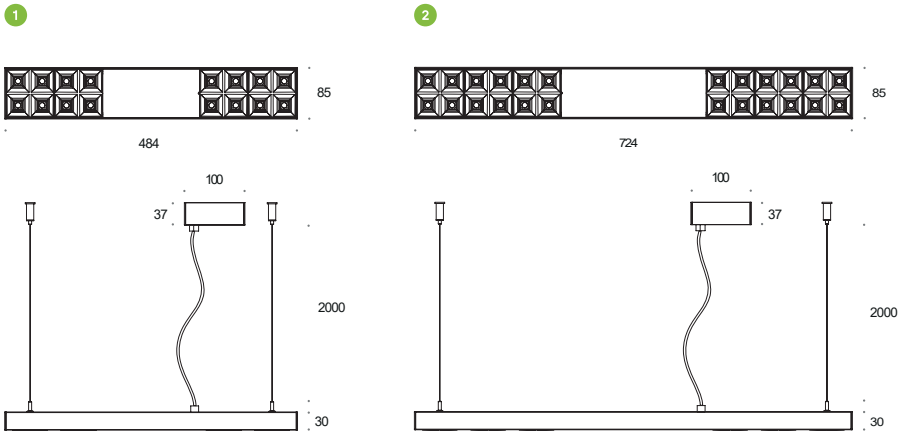

Opta Grid ZW

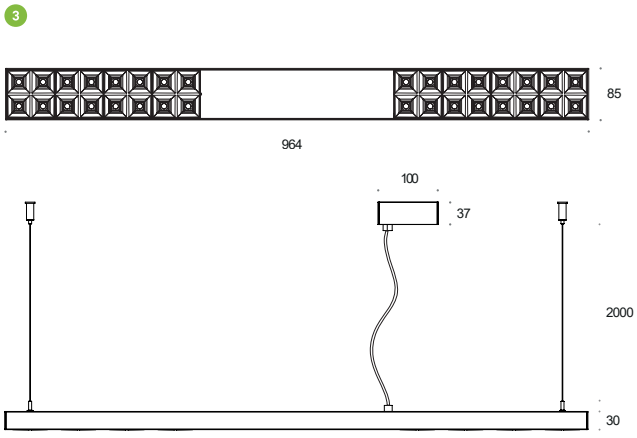

	Model		On—Off	Switch DIM	DALI2	PhaseCut	Accessories	White + Black .33	Black .02	White .03	Mixed .99	CRI98 2700K .927	CRI98 3000K .930	CRI98 4000K .940	Wide 53° .W	X-Wide 85° .XW
	Opta Grid NT	⏚														
1	X1 NT	| 9.6W 870lm	3.3340					•	•	•	•		⊙	⊙	•	•
2	X2 NT	| 18W 1730lm	3.3341	3.3343	3.3342			•	•	•	•		⊙	⊙	•	•
3	X4 NT	| 19W 1180lm	3.3344	3.3346	3.3345			•	•	•	•		⊙	⊙	•	•
4	X6 NT	| 26W 1780lm	3.3347					•	•	•	•		⊙	⊙	•	•
5	X8 NT	| 34W 2370lm	3.3348	3.3350	3.3349		❶	•	•	•	•		⊙	⊙	•	•
6	X1Q NT	| 9.6W 870lm	3.3351				❶	•	•	•	•		⊙	⊙	•	•
7	X4Q NT	| 19W 1180lm	3.3352	3.3354	3.3353			•	•	•	•		⊙	⊙	•	•
	Opta Grid ZW	⏚														
1	X4 ZW	| 19W 1180lm	5.3355	5.3357	5.3356			•	•	•	•		⊙	⊙	•	•
2	X6 ZW	| 26W 1780lm	5.3358					•	•	•	•		⊙	⊙	•	•
3	X8 ZW	| 34W 2370lm	5.3359	5.3361	5.3360			•	•	•	•		⊙	⊙	•	•
	Opta Disk NT	⏚														
1	Opta Disk X1 NT	| 10W 810lm, **49°**	3.3635			3.3636		•	•	•	•	•	•	•		
2	Opta Disk X2 NT	| 19W 1620lm, **49°**	3.3637	3.3638	3.3639	3.3640		•	•	•	•	•	•	•		
	Opta Disk WP	⏚														
1	Opta Disk Round WP	| 10W 810lm, **49°**	4.3641	4.3642	4.3643	4.3644		•	•	•	•	•	•	•		
2	Opta Disk X1 WP	| 10W 810lm, **49°**	4.3645	4.3646	4.3647	4.3648		•	•	•	•	•	•	•		
3	Opta Disk X2 WP	| 19W 1620lm, **49°**	4.3649	4.3650	4.3651	4.3652		•	•	•	•	•	•	•		
4	Opta Disk X1 Mounting Frame	**[required]**					4.3653									
5	Opta Disk X2 Mounting Frame	**[required]**					4.3654									

⊙ CRi90

energy pg/str.17

Opta Disk NT

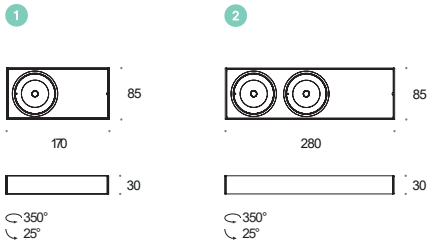

Opta Disk Round WP

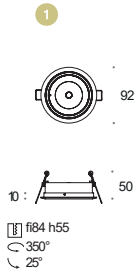

Opta Disk WP

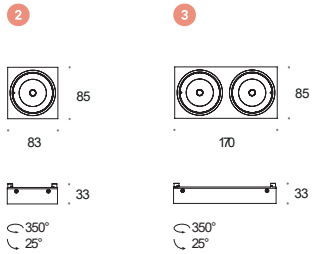

Opta Disk WP—mounting frames

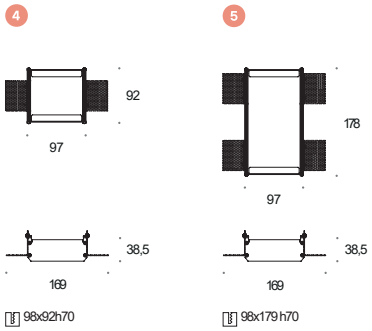

details subject to change.